Trusted Partner.

RENK

SLIDE BEARING SOLUTIONS

Slide Bearings
Type E – series EF journal range 80-355 mm

RH1085

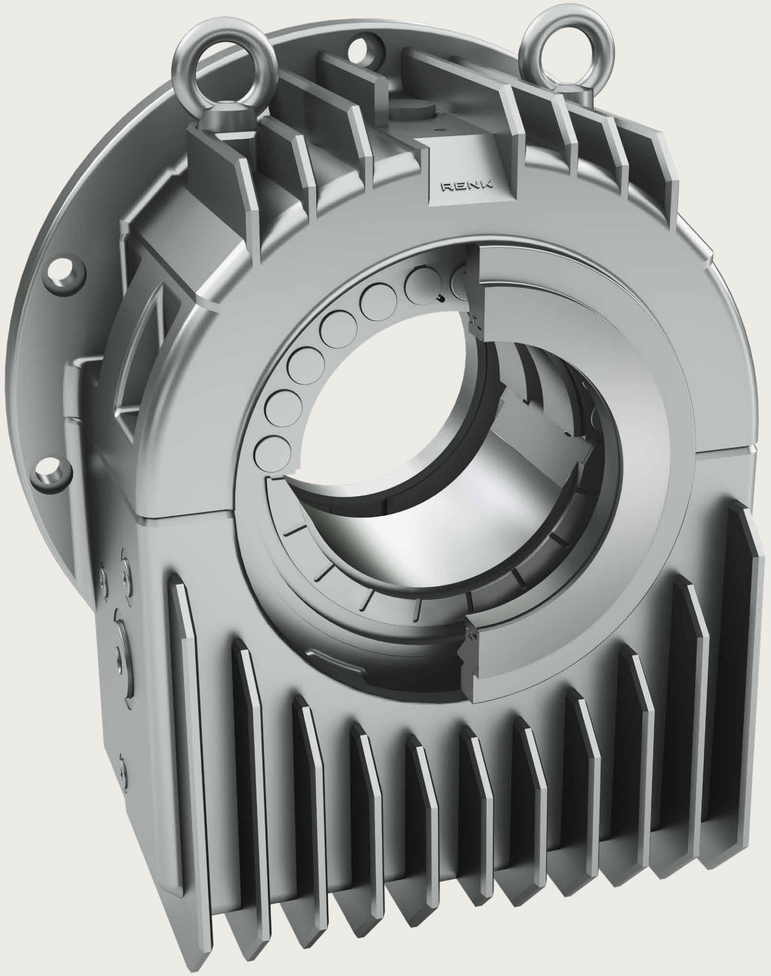

Technical Information

This leaflet provides essential guidelines for most applications using EF-type bearings with electric machines. The full modular systems of the EF-type bearing is available, including options like two- or four-lobe bores, journal titling pads, and RD thrust pads (additional details available upon request). Many components for the list variants are stocked for quick availability.

Bearing Housing

The finned EF-type housings are made from a high-quality cast iron (EN-GJL- 300) and are designed for heavy duty performance. Other materials such as, for instance, nodular cast iron EN-GJS- 400-18-LT can be supplied by special arrangement. Tapped holes for thermometer, oil inlet and outlet, oil sight glass, thermometer in the oil sump or suction line of a circulating pump are available on either side. For special cases (e. g. fitting of oil coolers or vibration detectors) finish machined housings are taken from stock and provided with additional connection holes.

Bearing Shells

The shells are spherically seated in the housing. They consist of a supporting steel body lined with TIN based RENKmetal therm 89. Both design and manufacture are in accordance with the highest standards required in heavy engineering: trouble-free assembly and long life even under severe operating conditions. Depending on the operational parameters and performance, other white metals such as therm81ag are avialable. EF-type bearings are mostly equipped with shells with plain cylindrical bore and loose oil ring. Shells are available either for selfcontained operation (E.NL.) or prepared for external oil circulation (E.ZL.). Apart from bearings without thrust parts (type...Q) there are shells with plain white-metal lined shoulders (type...B) to absorb limited non-continuous axial loads, as well as shells with built-in taper land faces (type...K) which will absorb medium axial loads.

Thrust loads of a medium size are absorbed by taper land faces integral with the shoulders and suitable for one sense of rotation (type...E). High thrust loads can be taken by tilting RD thrust pads (type…A). In addition to the oil film, the cup springs supporting the RD thrust pads have damping properties and intercept shocks elastically. This design requires lubrication by circulating oil, e. g. the use of an oil pump.

Seals

EF-type bearings with floating labyrinth seals, known as type 10, are suitable for standard applications and meet the IP44 protection grade, which provides a level of resistance against dust and splashing water. However, if you need higher protection, you can select additional options with the EF modular system.

To ensure that these bearing are well-protected against any internal conditions that might affect performance, such as vacuum environment, or strong air moment, EF-type bearings also come with „machine seals“. Made from gray cast iron: these machine seals attached directly to the bearing housing and create a sealing gap with the shaft, adding an extra layer of protection.

The space between housing and machine seal is connected to atmosphere so that no vacuum or strong air turbulence can occur at the internal bearing seal.

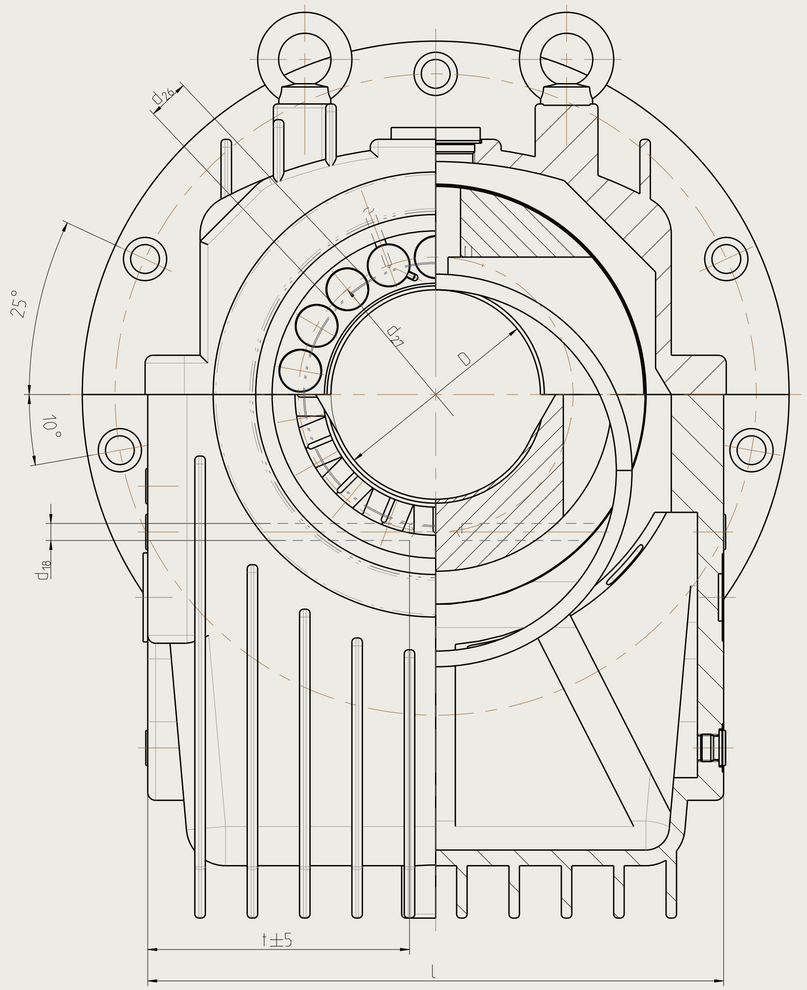

Technical Information

Oil Supply

Self-lubrication by means of a loose oil ring for peripheral shaft speeds up to 20 m/s is possible. The lubricating oil delivered to the internal perimeter is transferred by the loose oil ring directly to the shaft. Where bearings are lubricated by oil circulation systems, loose oil rings can be used with peripheral shaft speeds of up to 26 m/s. Loose oil rings can also be used for marine applications. In this case additional guide bushes are built into the shells (details on request).

Electrical Insulation

As a protection against stray currents conducted by the shaft, EF-type bearings can also be supplied in insulated versions. To do so, the spherical bearing shell seating within the housing is electrically insulated by using a plastic layer or an insulating foil. All EF-type bearing housings “with spherical insulation“ are available from stock.

Heat dissipation

Frictional heat is often dissipated merely by radiation and convection only: “natural cooling“. Depending on the shaft diameter, speeds of up to 3600 min-1 are admissible. Because of their advanced design, EF-type bearings with natural cooling can now be used for a wide range of applications. Oil coolers incorporated in the oil sump can be used in addition. Dimensions on request. EF-type housings are generally suitable for connection to an oil circulating system..

Temperature Control

Two independent commercially available thermosensors can be used for temperature control. We recommend the use of RENK resistance thermometers.

Oil Selection

Generally any branded mineral oil of low foaming tendency and good resistance to ageing can be used as a lubricant. The correct viscosity for each operating condition should be checked by EDP calculation. Such calculations are carried out at the design stage. A printout of the results computed can be provided on request.

1 Type
E

2 Housing
F end flange mounted

3 Heat dissipation
N natural cooling
Z lubrication by oil circulation from an external oil supply
X lubrication by oil circulation with external oil cooling for high oil throughput
W water cooling (finned tube cooler in oil sump)
U circulating pump and natural cooling
T circulating pump and water cooling

4 Shape of bore and type of lubrication*)
L plain cylindrical bore with loose oil ring lubrication

5 Thrust surface*)
Q without thrust parts (non-locating bearing)
B guide bearing (locating bearing)
K taper land faces for both senses of rotation (locating bearing)
E taper land faces for one sense of rotation (locating bearing)
A elastically supported circular tilting pads (locating bearing)

*) = if not mentioned see main catalogue, details on request

Example

for quoting a slide bearing EF-type, lubrication by oil circulation with external oil cooling, cylindrical bore with loose oil ring lubrication (for emergency operation), thrust part with taper land faces, size 14, shaft diameter 125 mm:

	1	2	3	4	5
Slide Bearings Type	**E**	**F**	**Z**	**L**	**K 14–125**

The indicated weights are average values (not binding).
The drawings are not strictly binding.

Dimensions of Bearings

(DIN 31 693 / ISO 11687-2)
range 9–18

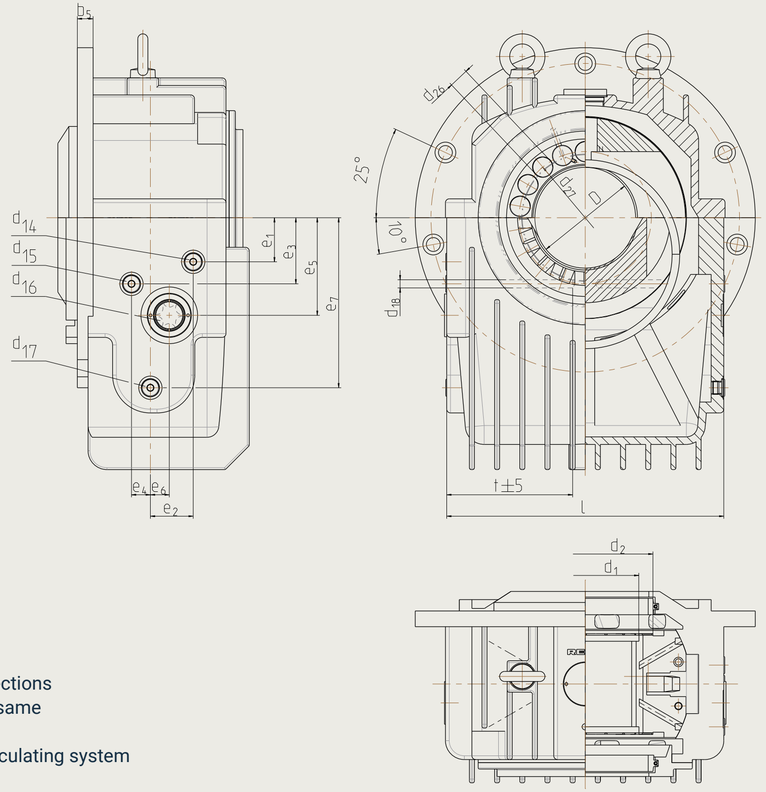

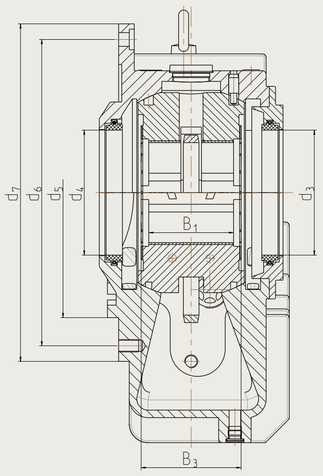

EF.LB / EF.LK / EF.LE
Sealing system labyrinth seal

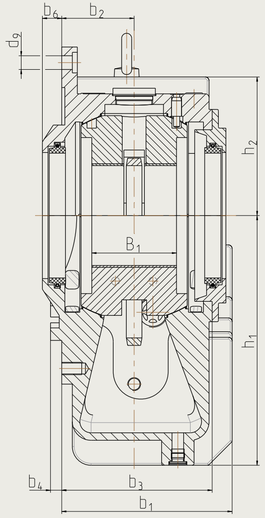

EF.LQ
Sealing system labyrinth seal

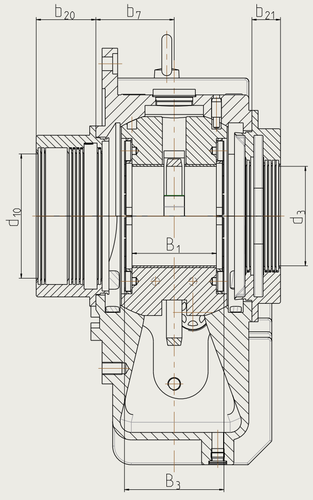

EF.LA
Sealing system rigid seal

The dimensions of the connections on the opposite side are the same

d_{14} oil inlet if connected to oil circulating system or circulating pump
d_{15} thermometer connection
d_{16} oil level or oil outlet if connected to circulating system
d_{17} screw plug for oil sump thermometer, suction line of circulating pump connection of heater (or modified for finned tube oil cooler optionally)

RENK

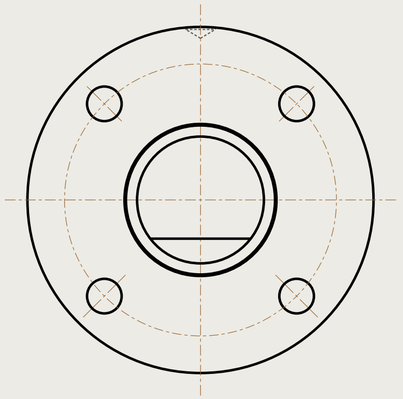

As for bearing types EFZL., the oil outlet with weir is to be mounted horizontaly at the bottom. The mark at the flange will then be visible centrally at the top.

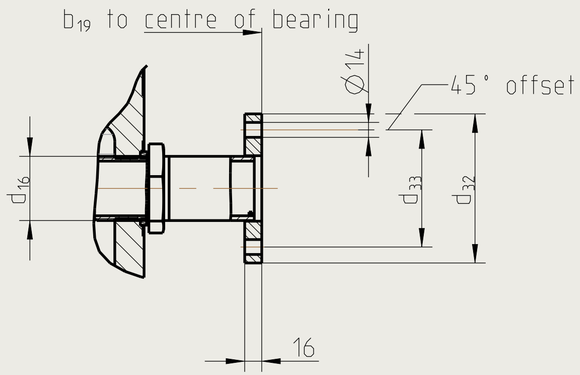

flange DIN EN 1092-1, Typ 01, Form A, PN6
oil outlet

Dimensions in mm

Size	D	B_1	B_3	b_1	b_2	b_3	b_4	b_5	b_6	b_7	b_{19}	b_{20} [2]	b_{21} [2]	d_1	d_2	d_3	d_4	d_5	d_6	d_7	d_9	d_{10}	d_{14}	d_{15}	d_{16}	d_{17}	d_{18}	d_{32}	d_{33}	e_1	e_2	e_3	e_4	e_5	e_6	e_7	h_1	h_2	l	t	d_{26}	d_{27}	RD-thrust pads [numb]	weight [kg]	oil cap. [l]
9	80	61,4	80 -0,22	162	70	140	14	12	23	-	215	-	39	86	110	80/ 90/ 100/ 110	100	280	310	340	14	-	G 3/8	G 1/2	G 1 1/4	G 1/2	11	120	90	35	35,5	60	20	85	22,5	175	250	130	270	115	20	110	14	46	2,8
	90	61,4												96	120		100																							115	20	120	16		
	100	65												106	130		100																							115	16	125	20		
11	100	81,4	100 -0,22	192	80	165	15	17	29	-	235	-	41	108	135	100/ 110/ 125/ 140	125	315	350	380	14	-	G 3/8	G 1/2	G 1 1/4	G 1/2	11	120	90	40	42	70	22,5	100	22,5	195	280	145	310	135	20	135	16	74	4,2
	110	81,4												118	150		125																							135	20	140	18		
	125	85												133	160		125																							127	16	150	22		
14	125	105,4	125 -0,22	232	100	205	16	23	26	103	285	86	43	135	170	125/ 140/ 160/ 180	160	355	415	460	18	125/ 140/ 160	G 3/8	G 1/2	G 1 1/2	G 1/2	11	130	100	60	55	85	27,5	125	27,5	240	340	185	370	165	25	165	18	125	8
	140	105,4												150	190		160																							165	25	180	20		
	160	106,4												170	200		160																							145	20	195	24		
	180 [1]	106,4												190	220		180																							125	-	-	-		
18	160	135,7	160 -0,22	273	116	241	18	25	31	126	315	96	46	172	215	160/ 180/ 200/ 225	200	400	490	540	22	160/ 180/ 200	G 1/2	G 1/2	G 1 1/2	G 1/2	13	130	100	70	68	105	30	155	30	270	400	225	440	197	31,5	210	18	200	13
	180	135,7												192	240		200																							197	31,5	230	20		
	200	140,4												212	250		200																							175	25	245	24		
	225 [1]	140,4												237	275		225																							150	-	-	-		

G = B.S.P.
[1] Available only with shells type B and Q.
[2] Dimensions with insulated bearing +3mm

Dimensions of Bearings

(DIN 31 693 / ISO 11687-2)
range 22–28

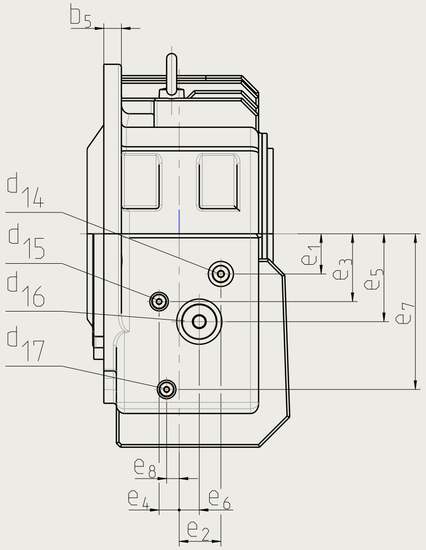

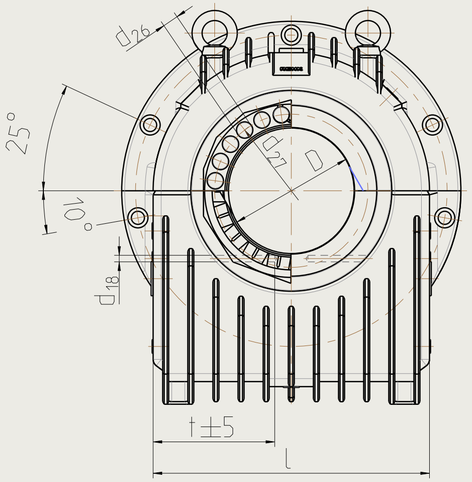

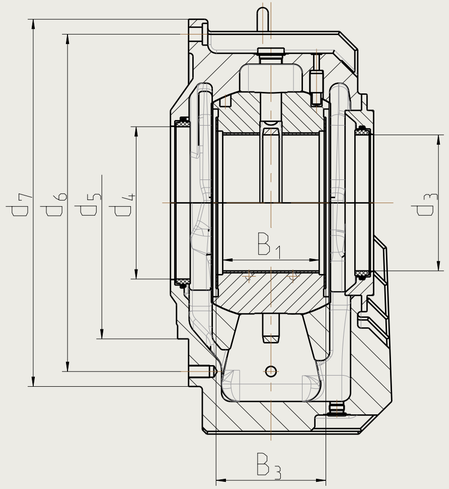

EF.LB / EF.LK / EF.LE
Sealing system labyrinth seal

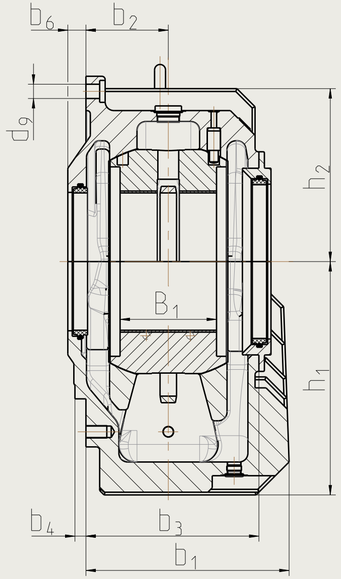

EF.LQ
Sealing system labyrinth seal

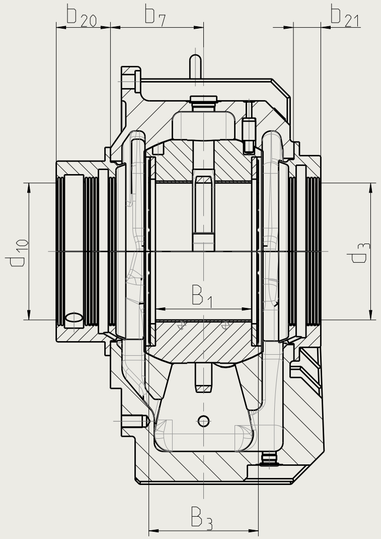

EF.LA
Design of the seal carrier
with rigid seal shown

The dimensions of the connections
on the opposite side are the same

d_{14} oil inlet if connected to oil circulating system or circulating pump
d_{15} thermometer connection
d_{16} oil level or oil outlet if connected to circulating system
d_{17} screw plug for oil sump thermometer, suction line of circulating pump connection of heater (or modified for finned tube oil cooler optionally)

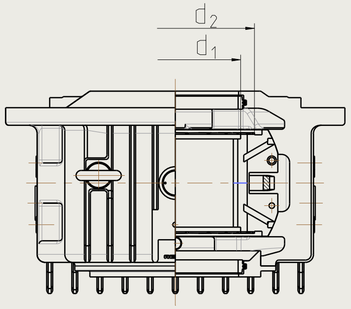

RENK

Dimensions in mm

Size	D	B_1	B_3	b_1	b_2	b_3	b_4	b_5	b_6	b_7	b_{19}	b_{20} [2]	b_{21} [2]	d_1	d_2	d_3	d_4	d_5	d_6	d_7	d_9	d_{10}	d_{14}	d_{15}	d_{16}	d_{17}	d_{18}	d_{32}	d_{33}	e_1	e_2	e_3	e_4	e_5	e_6	e_7	e_8	h_1	h_2	l	t	d_{26}	d_{27}	RD-thrust pads [numb]	weight [kg]	oil cap. [l]
22	200	168,5	200 -0,22	370	150	315	20	35	33	170	395	99	49	214	265	200/ 225/ 250/ 280/ 300	250	500	620	675	26	200/ 225/ 250/ 280	G 3/4	G 1/2	G 2	G 1/2	13	140	110	80	83	135	40	175	40	310	-	425	315	550	252	40	265	18	430	21
	225	168,5												239	290		250																								252	40	285	20		
	250	175,7												264	315		250																								238	31,5	305	24		
	280[1]	175,7												294	345		280																								192	-	-	-		
	300[1]	175,7												310	345		300																								177	-	-	-		
28	250	213,2	250 -0,24	414	170	375	30	40	43	195	475	89	53	266	325	250/ 280/ 300/ 315/ 335[3]/ 355	315	600	770	835	33	250/ 280/ 300/ 315/ 335	G 3/4	G 1/2	G 2 1/2	G 1/2	13	160	130	95	106	155	50	220	50	375	25	485	360	690	322	50	325	18	770	28
	280	213,2												296	355		315																								322	50	355	20		
	300	218,5												316	375		315																								272	40	365	24		
	315	218,5												331	390		315																								267	40	380	24		
	335	218,5												351	410		355																								242	-	-	-		
	355	218,5												371	430		355																								229	-	-	-		

G = B.S.P.
[1] Available only with shells type B and Q.
[2] Dimensions with insulated bearing +3mm
[3] rigid seal

Shaft dimensions

Non-locating bearing

Type of bearing shell E...Q

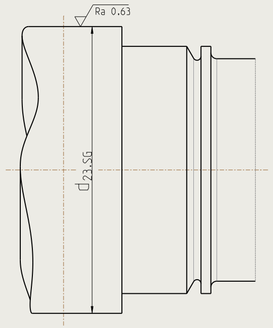

shaft design for machine seal
with gap seal

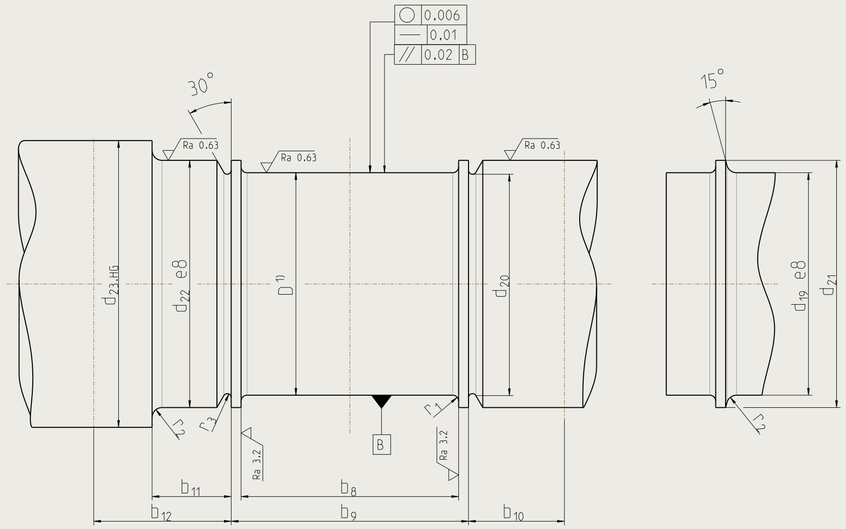

shaft design for machine seal with /
without seal packing

Locating bearing

Type of bearing shell E...B (d_{24}), E...K (d_{24}), E...E (d_{24})

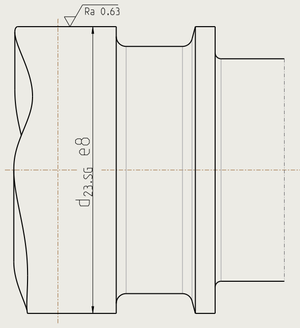

shaft design for machine seal
with gap seal

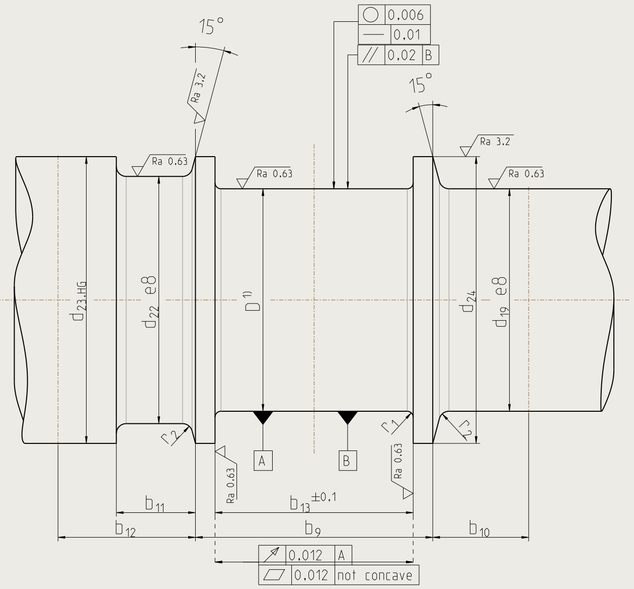

shaft design for machine seal with /
without seal packing

chamfered edges 0,5 x 45°
surface condition DIN ISO 1302

Shaft dimensions

Locating bearing

Type of bearing shell E...A (d_{25})

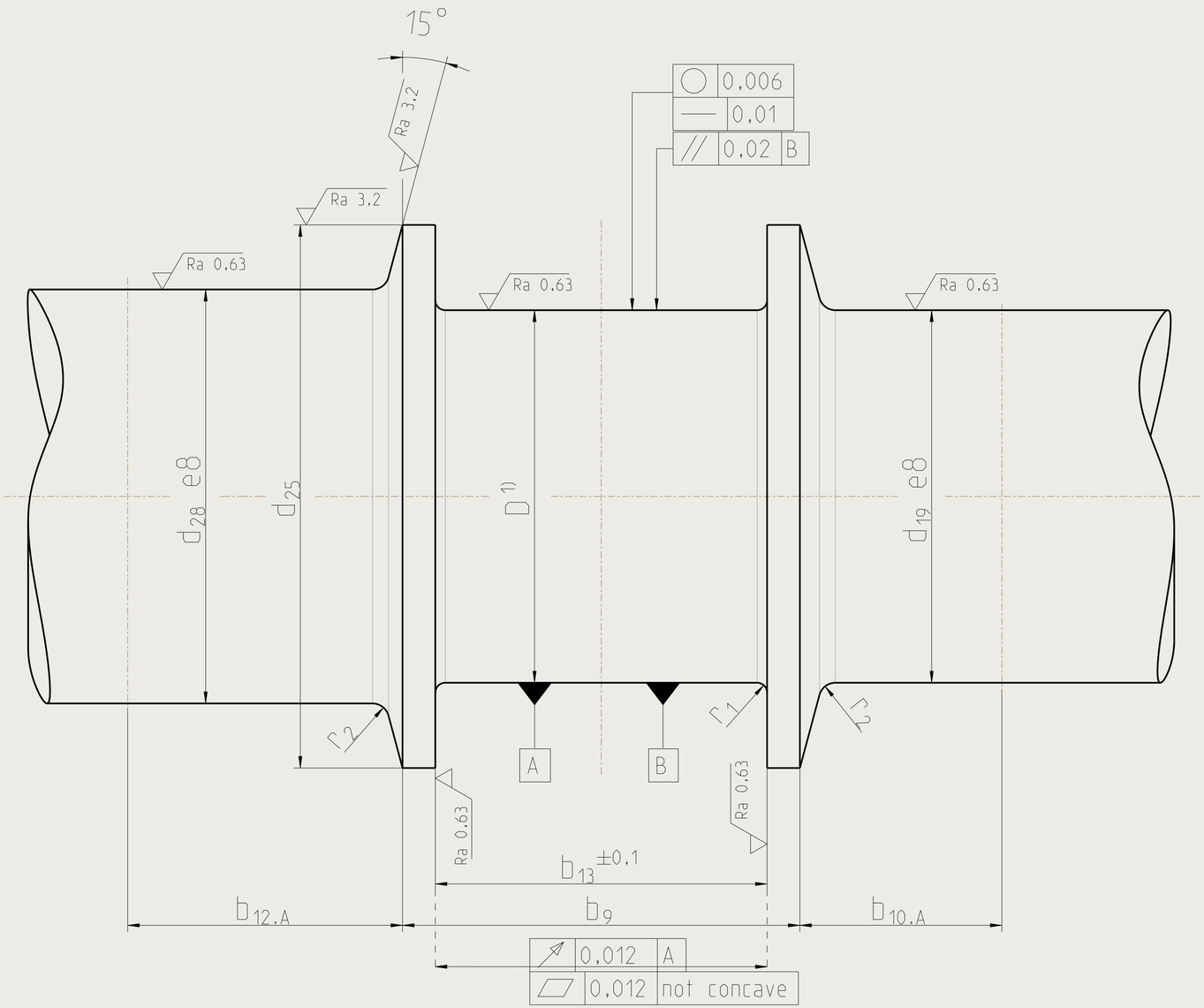

shaft design for rigid seal

chamfered edges 0,5 x 45°
surface condition DIN ISO 1302

Dimensions in mm

Size	D[1]	b_8[1]	b_9	b_{10}	$b_{10.A}$	b_{11}	b_{12}	$b_{12.A}$	b_{13}[1]	d_{19} (shaft diameter seal) / d_{20} (diameter recess)[5]	d_{21}	d_{22}	$d_{23.HG}$[2]	$d_{23.SG}$[2]	d_{24}	d_{25}	d_{28}	r_1	r_2	r_3
9	80	90	100	63	-	60	102	-	80,4	80 / -	90	100	110	110/125	110	132	-	2,5	4	1,6
	90									90 / (80)	100		120		120	142				
	100									100 / (90)	110		130		130	143				
11	100	110	120	68	-	55	107	-	100,4	110 / -	110	125	135	125/140/160	135	157	-	2,5	4	1,6
	110									125 / (100)	125		150		150	162				
	125									140 / (110)	140		160		160	168				
14	125	140	150	78	98	60	117	136	125,4	140 / -	140	160	170	160/180/200	170	192	125/140/160	4	6	2,5
	140									160 / (125)	160	160	190		190	207				
	160									180 / (140)	180	160	200		200	217				
	180[6]									200 / (160)	200	180	220		220	-				
18	160	180	188	82	106	65	124	150	160,4	160 / -	180	200	215	225/250	215	244	160/180/200	4	6	2,5
	180									180 / (160)	200	200	240		240	264				
	200									200 / (180)	225	200	250		250	273				
	225[6]									225 / (200)	250	225	275		275	-				
22	200	220	240	98	125	80	139	173,5	200,4	200 / -	225	250	265	280/315	265	308	200/225/250/280	6	10	4
	225									225 / (200)	250	250	290		290	328				
	250									250 / (225)	280	250	315		315	339				
	280[4]									280 / (250)	315	280	345		345	-				
	300[4]									300 / (280)	330	300	345		345	-				
28	250	280	296	113	144	75	142	168	250,4	250 / -	280	315	325	335/355/375	325	378	250/280/300/315/335	6	10	6
	280									280 / (250)	310	315	355		355	408				
	300									300 / (280)	330	315	375		375	408				
	315									315 / (300)	345	315	390		390	423				
	335									335[3] / (315)	365	355	430		410	-				
	355									355 / (335)	385	355	430		430	-				

[1] The normal axial clearance is 0,5 mm. When directional changes of thrust loads or axial shocks are to be anticipated, the dimensions b_{13} may be reduced by a further 0,3 mm. Where a locating bearing is only required for a test run, the dimension b_{13} can be increased by 3..6 mm. In this case dimensions b_{13} have to be considered.

[2] All diameters d_{23} are for standard machine seals and are valid for each shaft diameter D.

[3] Rigid seal

[4] Available only with shells type B and Q.

[5] The choice of recess (d_{20}) is a suggestion for the design, which is determined by the seal diameter.

Tolerances of form and position to DIN 31699. Degree of accurancy B10 (radial). Degree of accurancy B20 (axial); other upon request. General tolerance DIN 7168 mS.

Customized solutions on request

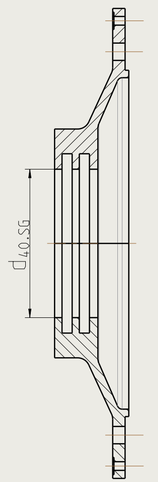

Design of the machine seal with the option gap seal (SG) shown. (only split type)

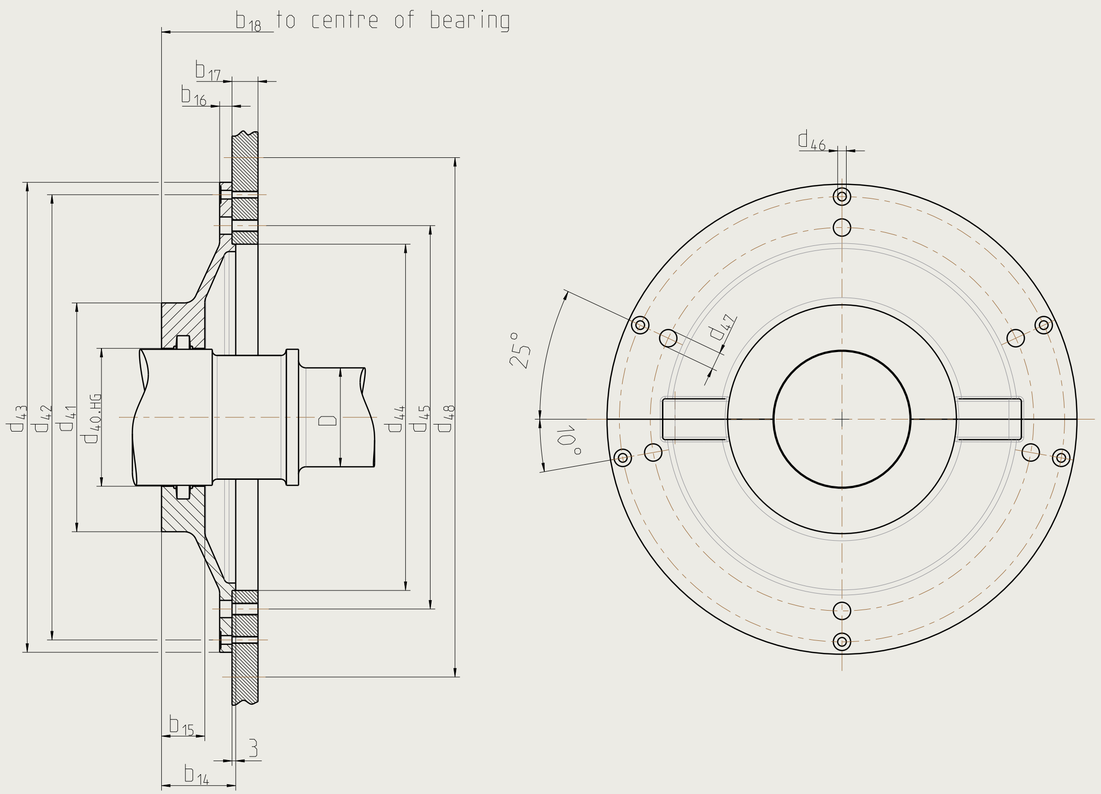

Design of the machine seal with the option seal packing shown. Available in non split (type N) and non split with seal packing (type H), Optional in split (type NG), split with seal packing (type HG)

Dimensions in mm

Size	D	b_{14}	b_{15}	b_{16}	b_{17} [1]	b_{18} [5]	$d_{40.HG}$ [2]	$d_{40.SG}$	d_{41}	d_{42}	d_{43}	d_{44}	d_{45}	d_{46}	d_{47}	d_{48} [4]	weight [kg]
9	80	60	35	10	21	148	111,5	110/ 125	160	360	380	280	310	7	14	420	4,5
	90						121,5										
	100						131,5										
11	100	65	35	10	21	163	136,5	125/ 140/ 160	180	400	420	315	350	7	14	460	5
	110						151,5										
	125						161,5										
14	125	70	35	10	21	188	171,5	160/ 180/ 200	230	375	395	355	-	7	-	550	4,8
	140						191,5										
	160						201,5										
	180						221,5										
18	160	75	40	10	26	214	216,5	225/ 250	290	430	460	400	-	10	-	640	6,5
	180						241,5										
	200						251,5										
	225						276,5										
22	200	80	45	10	28	255	266,5	280/ 315	390	535	570	500	-	10	-	785	10
	225						291,5										
	250						316,5										
	280						346,5										
	300						346,5										
28	250	85	50	10	36	288	326,5	335/ 355/ 375	450	640	680	600	-	10	-	970	15
	280						356,5										
	300						376,5										
	315						391,5 [3]										
	335						431,5 [3]										
	355						431,5 [3]										

[1] Min. recommended value
[2] Min. inner diameter of the machine seal depends on the diameter of collars for locating bearings due to non split design.
[3] Machine seals with a diameter from 391,5 to 431,5 mm are just available in non split design
[4] Diameter of finished surface of machine end shield
[5] Depends on the thickness of the machine shield (b17)

RENK worldwide

Assembly and Distribution Centers with Sales and Engineering Support *

RENK Bearings GmbH
Weltausstellungsallee 21
30539 Hannover
Germany
Phone: +49 511 8601-0
Email: slidebearings@renk.com

RENK Corporation
304 Tucapau Road
Duncan
S.C. 29334
United States of America
Phone: +1 864 433 0069
Email: RC.Sales@renk.com

RENK France S.A.S.
67 Rue d'Epluches
95310 Saint-Ouen-l'Aumône
France
Phone: +33 1 34 48 37 00
Email contact@renk-france.fr

COFICAL RENK Mancais do Brasil Ltda.
54 km No. 10386
Rodovia BR 280
Guaramirim - SC, 89270-000
Brazil
Phone: +55 47 3373 6400
Email: infobr@renk.com

www.renk.com

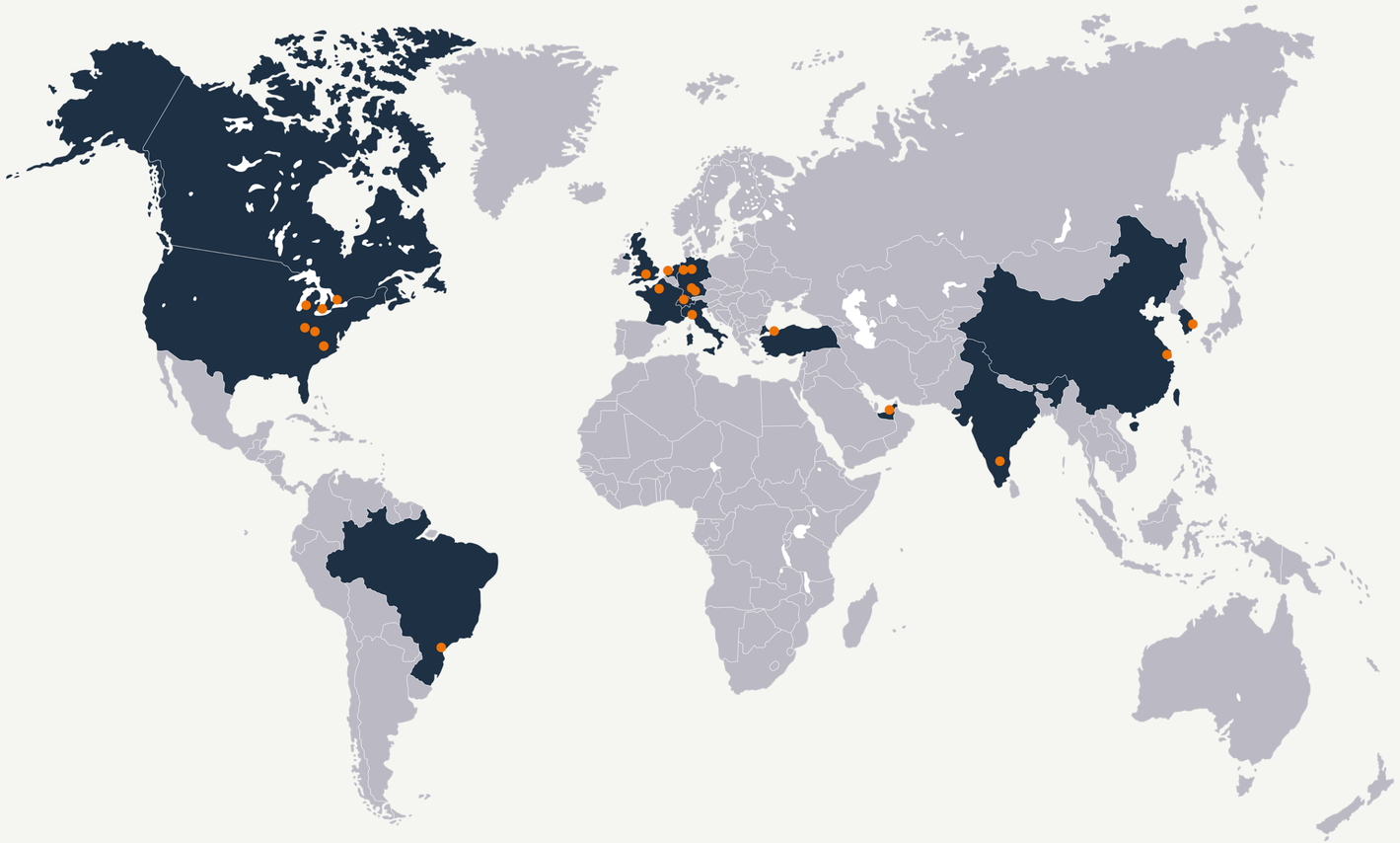

RENK Online Shop for E bearings.

Our new user-friendly online store makes it easier for you to search, select and order the spare parts you need. Thanks to our global service network, we are also able to deliver the required spare parts quickly whenever you need.

The direct way to the store.
https://shop.renk.com

* All other countries will be served from the german location.

Edition: 2025-11-19